Slim Profile Single Monitor Arm Mount

OFD-106S - Clamp Mount, Silver

- Built-in wire management
- Pneumatic cylinder adjustment
- Monitor mount removable for easy installation

specification

Screen size	Load weight (lbs)	Adjust height (inch)	Pitch angle	Horizontal view angle	Swivel angle	VESA (inch)	Packing details(inch)	N.W.(lbs)	G.W.(lbs)	Desk thickness (inch)	
										Desk hole (inch)	Clamp (inch)
≤ 32"	3.3-19.8	9.6"	+90°~ -55°	±90°	360°	2.95*2.95" 3.94*3.94"	box:17.7*8.27*4.72 ctn:18.1*9.25*20.1 Qty/Ctn4/1	7.05	8.22	3.15"	2.95"

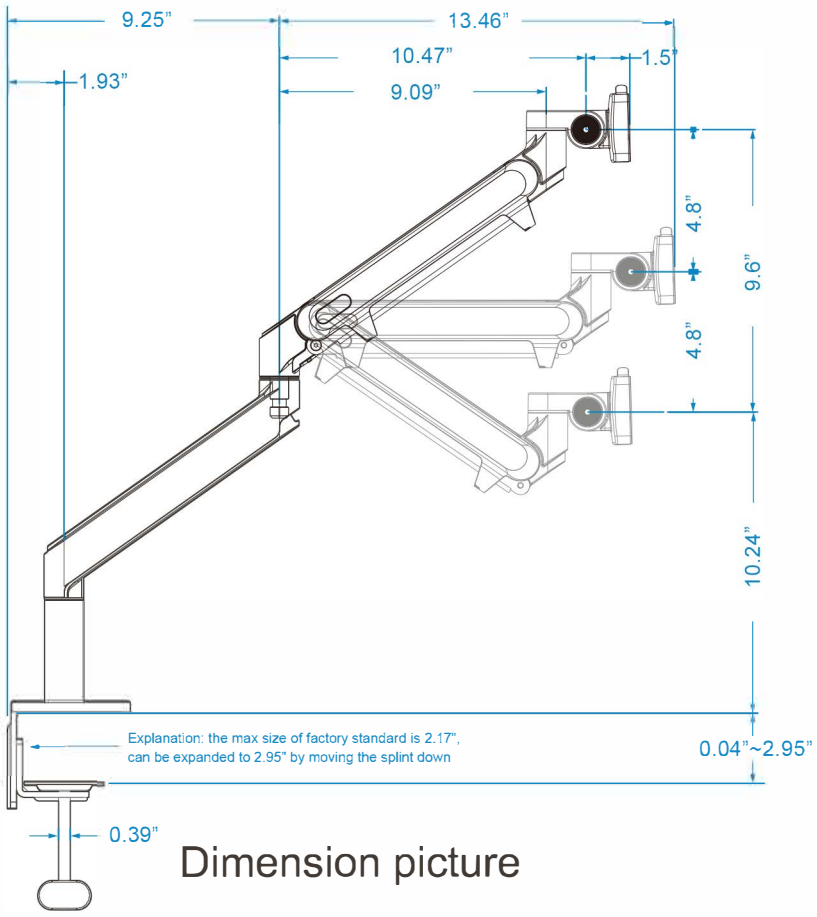

Dimension picture

- Effortlessly adjust the angle and focal depth of your flat-screen monitor for either seated or standing applications

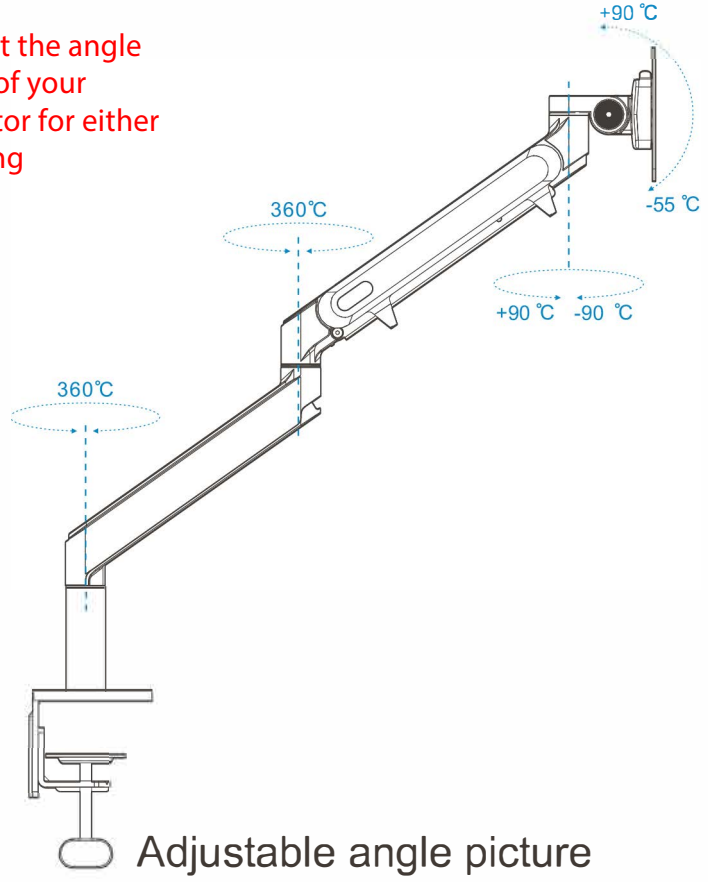

Adjustable angle picture